Clamptek®

PART NUMBER: CH-301-CL

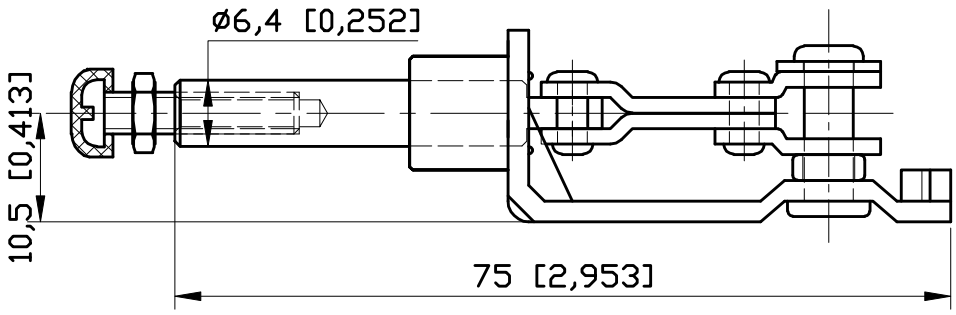

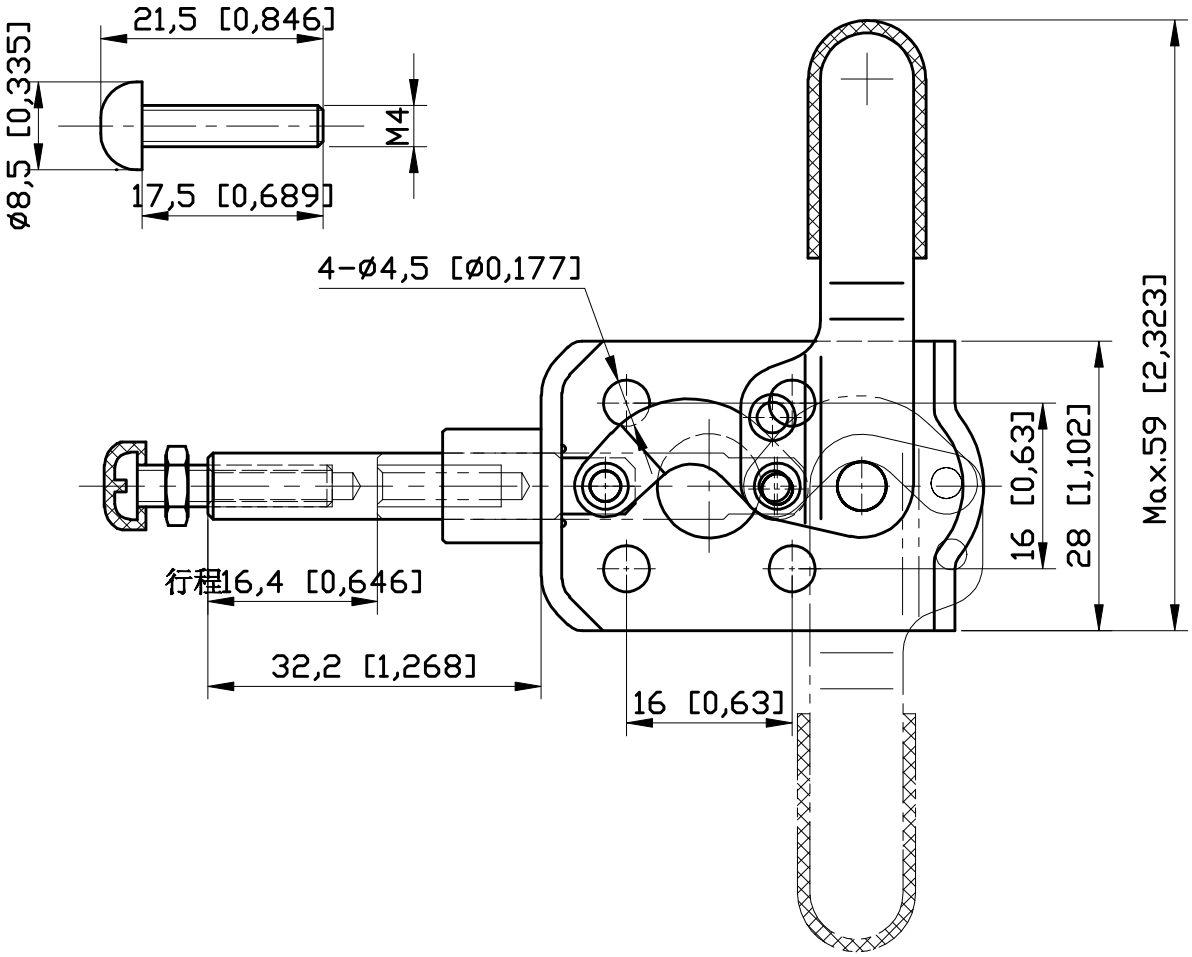

HANDLE OPENS 180°

PLUNGER STROKE 16.4mm

SPINDLE SUPPLIED:CH-FC-042007